PARTS MANUAL

W20-25ZA
(A495)

CUSTOMER EDITION

HYSTER

1524246
06/2015

©2015 HYSTER COMPANY

SECTIONS

1 FRAME/DRIVE UNIT

2 ELECTRICAL SYSTEM

3 STEER HANDLE/BRAKE SYSTEM

4 LOAD WHEEL

5 HYDRAULIC SYSTEM

6 MAST-TWO STAGE LIMITED FREE-LIFT

7 CARRIAGE

8 OPTIONS

9 NUMERICAL INDEX

This Parts Manual is divided into 9 major sections which are listed above. Quick reference to these sections can be made by placing the right thumb on the tab of the desired section, bending the book back and thumbing the pages to the corresponding tab.

Thanks very much for your reading,

Want to get more information,

Please click here, Then get the complete manual

JustClickHere

NOTE:

If there is no response to click on the link above, please download the PDF document first, and then click on it.

Have any questions please write to me:
admin@servicemanualperfect.com

TABLE OF CONTENTS

DESCRIPTION	PAGE
B	
BASE ARM	1-6
BATTERY AND CHARGER ASSEMBLY	8-2
BATTERY CHARGER ASSEMBLY	
→ 5/2005	2-12
5/2005 ↔ 11/2007	2-14
11/2007 →	2-16
BATTERY CONNECTOR	2-18
BATTERY SPACER	2-20
C	
COVERS	1-2
D	
DRIVE MOTOR	
24 VOLT	2-7
E	
ELECTRICAL ASSEMBLY	2-2
F	
FLOODED BATTERY POWER PACK	2-8
FORK CARRIAGE	7-2
FORKS	
HOOK TYPE CARRIAGE	1-8
H	
HYDRAULIC POWER UNIT	5-4
HYDRAULIC POWER UNIT ASSEMBLY	5-2
L	
LABELS AND MANUAL	1-4
LIFT	6-6
LIFT CYLINDER	6-8
LOAD BACKREST	1-10
LOAD WHEEL ASSEMBLY	
SINGLE	4-2
M	
MAST MOUNTING	6-4
MAST WELDMENTS	6-2
MASTER DRIVE UNIT	1-12
O	
OPERATOR GUARD	
LEXAN - OPTIONAL	6-10
WIRE MESH - STANDARD	6-9
T	
TILLER HANDLE ARM ASSEMBLY	
COMPOSITE TILLER HEAD	3-2

©2015 HYSTER COMPANY

TABLE OF CONTENTS (continued)

DESCRIPTION	PAGE
TILLER HEAD ASSEMBLY	
COMPOSITE	3-4
W	
WINDOWS	
ZAPI-LAPTOP/PC KIT	8-4
WIRE HARNESS	
JUMPERS	2-6
MAIN TRUCK	2-4
Z	
ZAPI HANDSET KIT	8-5

©2015 HYSTER COMPANY

ABBREVIATIONS QUICK REFERENCE SHEET

Listed below are abbreviations used in parts manuals to denote the following expressions:

TERM	DEFINITION
Amp	Amperes
AR	As Required
BDI	Battery Discharge Indicators
BWI	Brush Wear Indicator
CE	Communicator End
CRE	Corrosive Environment
D/B	Date Break
dbA	Decibel "A" Scale
DE	Drive End
ECH	Empty Container Handler
ECH-3	Empty Container Handler - 3 High Stacking
ECH-4	Empty Container Handler - 4 High Stacking
ECH-5	Empty Container Handler - 5 High Stacking
ECH-6	Empty Container Handler - 6 High Stacking
ECH-7	Empty Container Handler - 7 High Stacking
ECM	Electronic Control Module
ECN	Engineering Change Notice
EEPROM	Electrically Erasable Programmable Read Only Memory
EPA	US Environmental Protection Agency
EPROM	Electrically Programmable Read Only Memory

TERM	DEFINITION
FRE	Freezer Environment
in.	inches
LPG	Liquefied Petroleum Gas
MAP	Manifold Absolute Pressure
mm	millimeters
MSTS	Microprocessor Spark Timing System
NPT	National Pipe Threads
O/S	Oversize
PTO	Power Take Off
RPM	Revolutions per Minute
S/N	Serial Number
TMM	Truck Management Module
UL Type D	Diesel-Powered Safety Rating
UL Type DS	Diesel-Powered Safety Rating
UL Type E	Battery-Powered Safety Rating
UL Type EE	Battery-Powered Safety Rating
UL Type ES	Battery-Powered Safety Rating
UL Type G	Gasoline-Powered Safety Rating
UL Type GS	Gasoline-Powered Safety Rating
UL Type LP	Gas-Powered Safety Rating
UL Type LPS	LP Gas-Powered Safety Rating
U/S	Undersize
UL	Underwriters Laboratory
V	Volts

©2015 HYSTER COMPANY

HOW TO USE THE ILLUSTRATED PARTS MANUAL

This parts manual describes and illustrates assemblies, subassemblies, and detail parts needed for service replacement.

The different constructions are indicated by keys and footnotes. The callouts correspond to descriptions found on the next page.

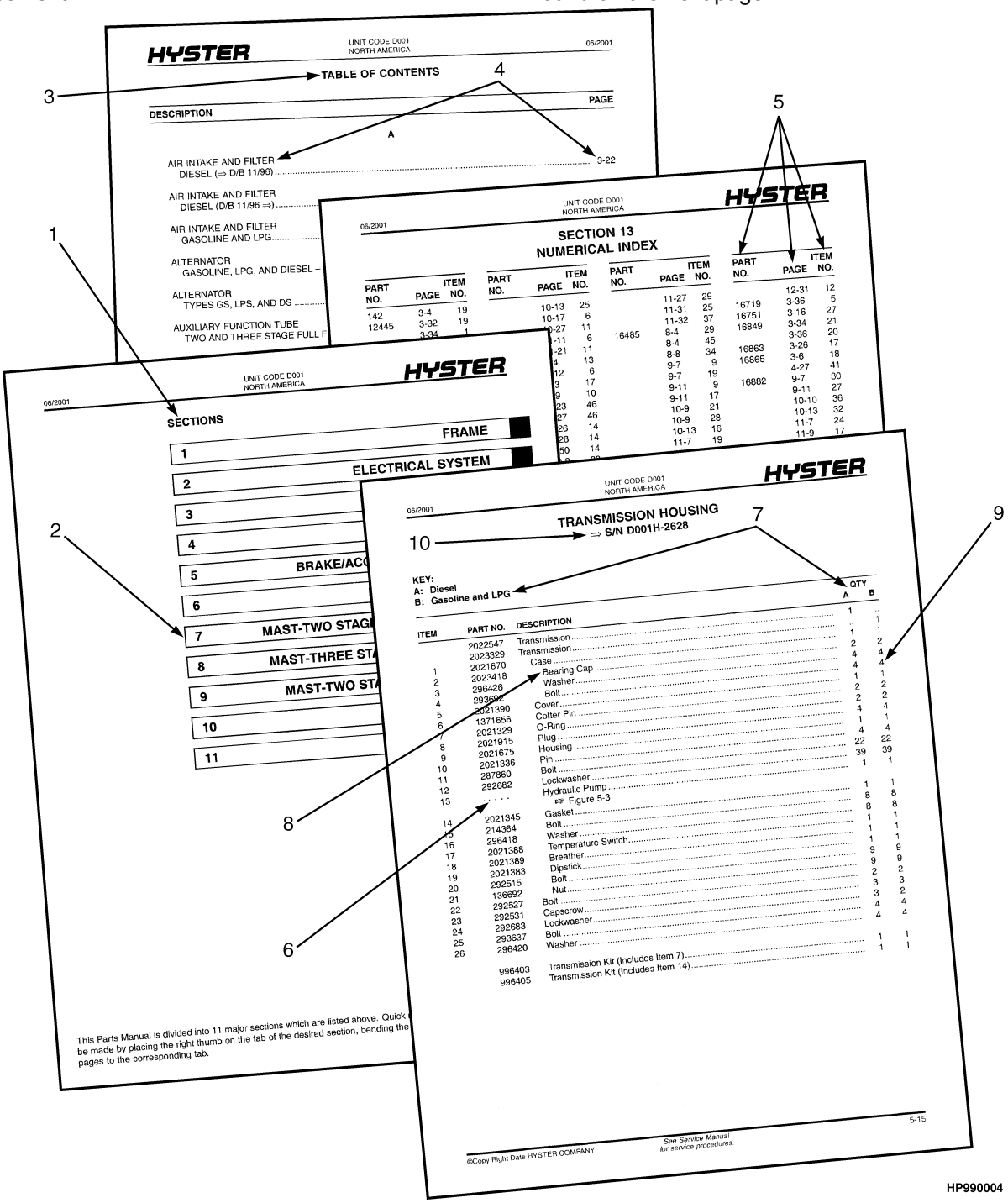

©2015 HYSTER COMPANY

HOW TO FIND THE DESIRED PART NUMBER

WHEN THE PART NUMBER AND THE NEXT HIGHER ASSEMBLY IS NOT KNOWN:

1. Determine the function and application of the part required. Turn to the Sections Page. Choose the general area of reference most likely to include the part.
2. Turn to the section you chose. Use the Section Table of Contents to determine the assembly which would normally contain the part required. Then locate the part on the assembly breakdown page.

WHEN THE PART NUMBER IS NOT KNOWN AND THE NEXT HIGHER ASSEMBLY IS KNOWN:

3. Determine the assembly the required part is used on. Turn to the Table of Contents (Page i).
4. Locate the assembly the required part is used on and turn to the page indicated for that assembly. Then locate the part on the assembly breakdown page.

WHEN THE PART NUMBER IS KNOWN:

5. Use the Numerical Index (Page 9-1) to find the part number. Turn to the page listed and locate the part as indicated by the item number.

GENERAL:

The assembly breakdowns include part numbers, descriptions, quantities required, keys and footnotes to help in selecting correct parts.

6. Parts Supersession Information. Part numbers that have this history will be displayed in the parts list in the order that they were superseded (from oldest to newest). The superseded part numbers will be shown with a line through them.

   Five periods in the PART NO. column (. . . . .) indicate that the part is either *Not Serviced Separately* or there is a reference to another figure. A figure reference is denoted by a pointing hand followed by a figure number in the DESCRIPTION column (☞Figure 10)
7. Keys are used to show two or more similar assemblies, RH and LH assembly parts, etc. Select the appropriate key, "A", "B", "C", "D", or "E" and the corresponding quantity column to find the required parts. Two periods in the QTY column (..) indicate that the part is not used for that assembly.
8. Indented descriptions under the DESCRIPTION column are used to indicate assemblies and subparts of assemblies. In the example on the previous page, *BEARING CAP* (Item 2) is a subpart of the major assembly *CASE*.
9. Quantities shown are for one assembly. The quantities of the subpart *BEARING CAP* are indicated as two and two. This means two per *CASE* assembly.
10. Serial number breaks identify the most current parts information and are shown as follows:
    → **S/N D001H2628**
    Indicates last serial number affected.
    S/N D001H2629 →
    Indicates the first serial number affected.
    S/N D001H1553 ↔ S/N D001H3291
    Indicates a range of serial numbers affected.

    ECN numbers for pending serial numbers are shown to allow for the inclusion of the most current parts information and are identified as follows:
    → **S/N Pending Per ECN 63243**
    Indicates a pending serial number for last unit affected.
    S/N Pending Per ECN 63243 →
    Indicates a pending serial number for first unit affected.

    Date breaks are used to indicate when a change occurred but a subsequent serial number break was not recorded. This is an arbitrary date usually based on the ECN release and are identified as follows:
    → **D/B 3/00**
    Indicates that a change occurred sometime within that month for the item affected.
    D/B 3/00 →
    Indicates that a change occurred sometime within that month for the item affected.
    D/B 3/00 ↔ D/B 4/00
    Indicates a range of production dates of the item affected.

    Contact your local dealer for Hyster lift trucks for serial number information for items with a ECN or a date break.

ORDERING PARTS:

When ordering replacement parts, give the unit serial number, part number, name of part and quantity required.

For any further information on parts, service, or ordering, consult your local dealer for Hyster lift trucks.

IDENTIFICATION OF TRUCK SERIAL NUMBERS

X	OOO	X	OOOO	X
(1)	(2)	(3)	(4)	(5)

(1) and (2) The first letter and three numbers indicate the truck unit code.

(3) The second letter indicates the plant of manufacture.

(4) The four or five digit number indicates the production sequence number of the truck.

(5) The final letter indicates the year of manufacture starting with "A" in 1957, 1980, and 2003. The letters "I", "O", and "Q" will not be used.

For pending serial numbers contact your local dealer for Hyster lift trucks.

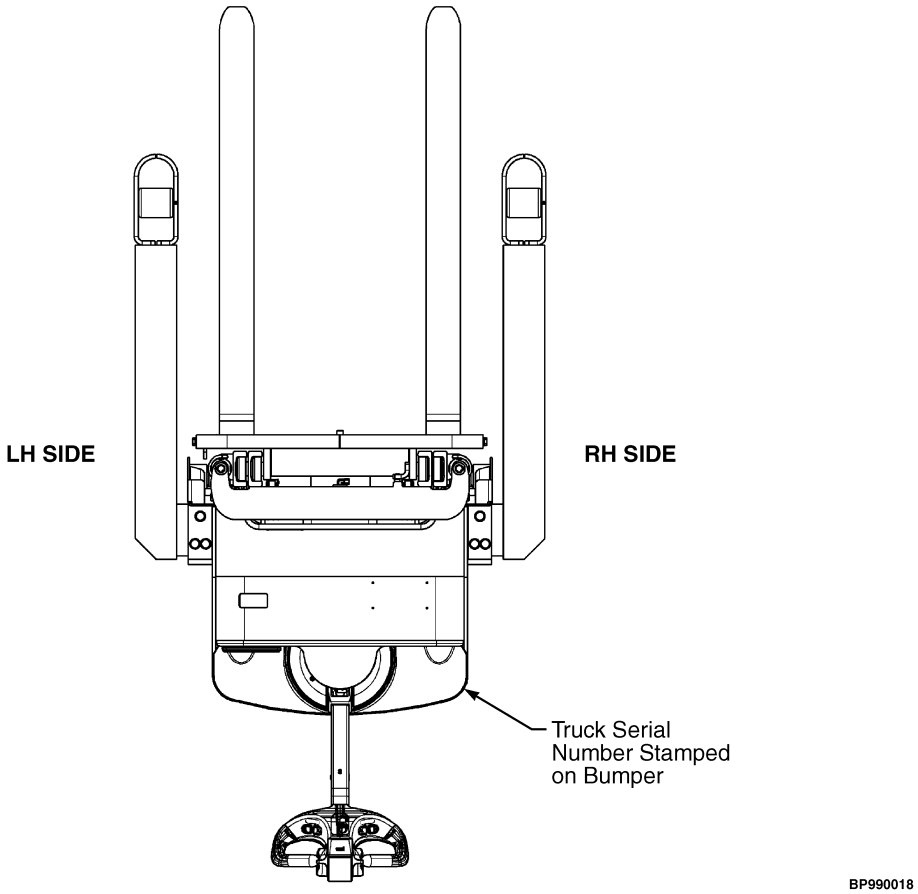

Parts referred to in this book as right or left hand parts are in accordance with the illustration above.

©2015 HYSTER COMPANY

PUBLICATIONS

Every new lift truck is provided with an OPERATING MANUAL. This manual has information that the operator must know for inspection and operation of the lift truck.

SERVICE MAINTENANCE MANUALS, which provide service and overhaul procedures, and PARTS MANUALS with complete replacement part identification, are available at a nominal fee from your Hyster dealer to assist users in effectively maintaining Hyster lift trucks in a safe, useful condition. See the list below for information on ordering specific publications for this model lift truck.

PUBLICATION	HYSTER PART NUMBER
Operating Manual	1506716
Service Manual (Complete)	1524248
Parts Manual	1524246

©2015 HYSTER COMPANY

NOTES

©2015 HYSTER COMPANY

1 FRAME/DRIVE UNIT

SECTION 1
FRAME/DRIVE UNIT

DESCRIPTION	PAGE
BASE ARM	1-6
COVERS	1-2
FORKS	
HOOK TYPE CARRIAGE	1-8
LABELS AND MANUAL	1-4
LOAD BACKREST	1-10
MASTER DRIVE UNIT	1-12

©2015 HYSTER COMPANY

COVERS (FIGURE 1-1)

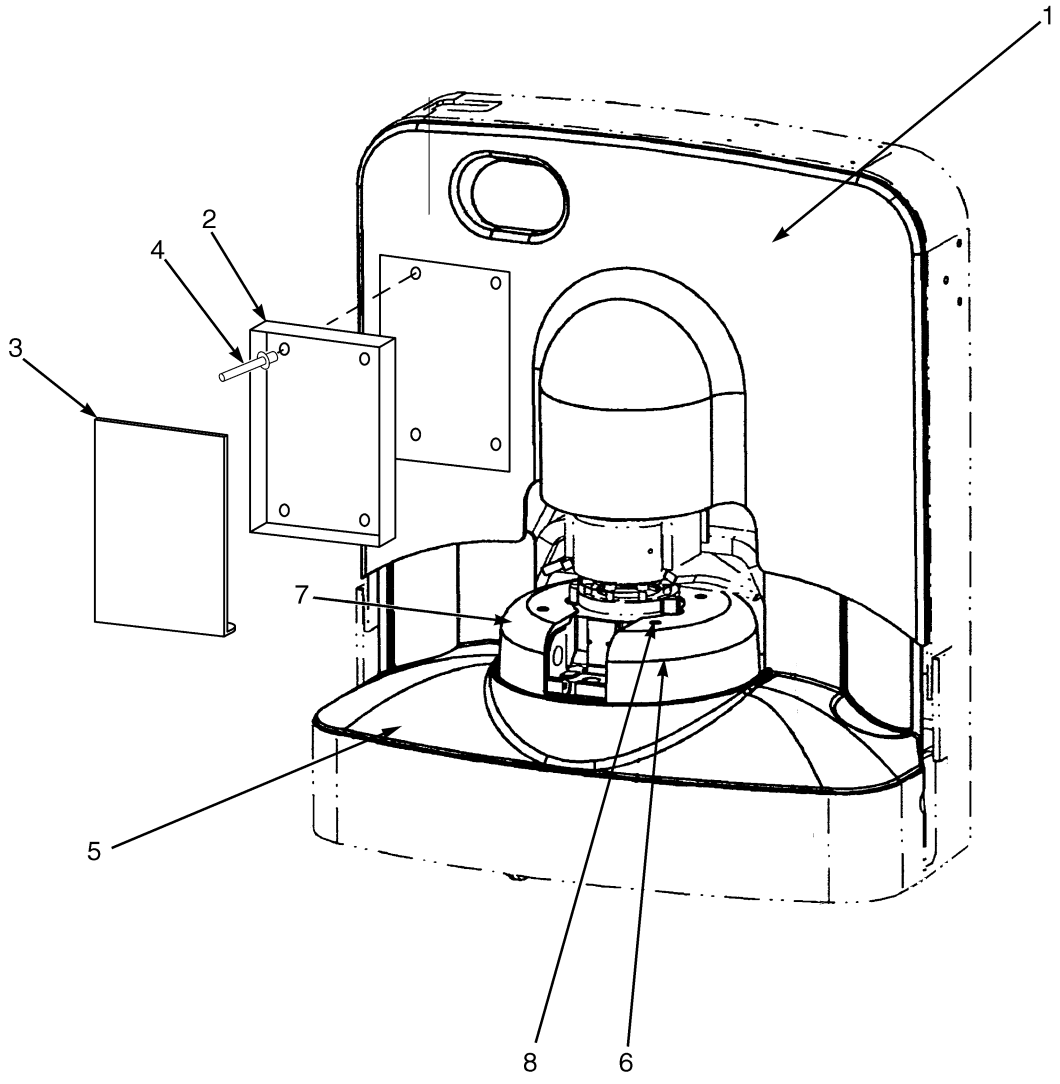

BP260016

©2015 HYSTER COMPANY

COVERS

ITEM	PART NO.	DESCRIPTION	QTY
1	1485654	Cover (Upper)	1
2	335989	Information Case	1
3	335991	Cover (Information Case)	1
4	2040664	Rivet	4
5	1495765	Cover (Lower)	1
6	**a** 1495764	Motor Cover (LH)	1
6	**b** 1537410	Motor Cover (LH) (Part may be labeled as RH)	1
7	**a** 1495763	Motor Cover (RH)	1
7	**b** 1537409	Motor Cover (RH) (Part may be labeled as LH)	1
8	296203	Capscrew	4

FOOTNOTES:

a → S/N A495N01505A

b S/N A495N01506A →

©2015 HYSTER COMPANY

LABELS AND MANUAL (FIGURE 1-2)

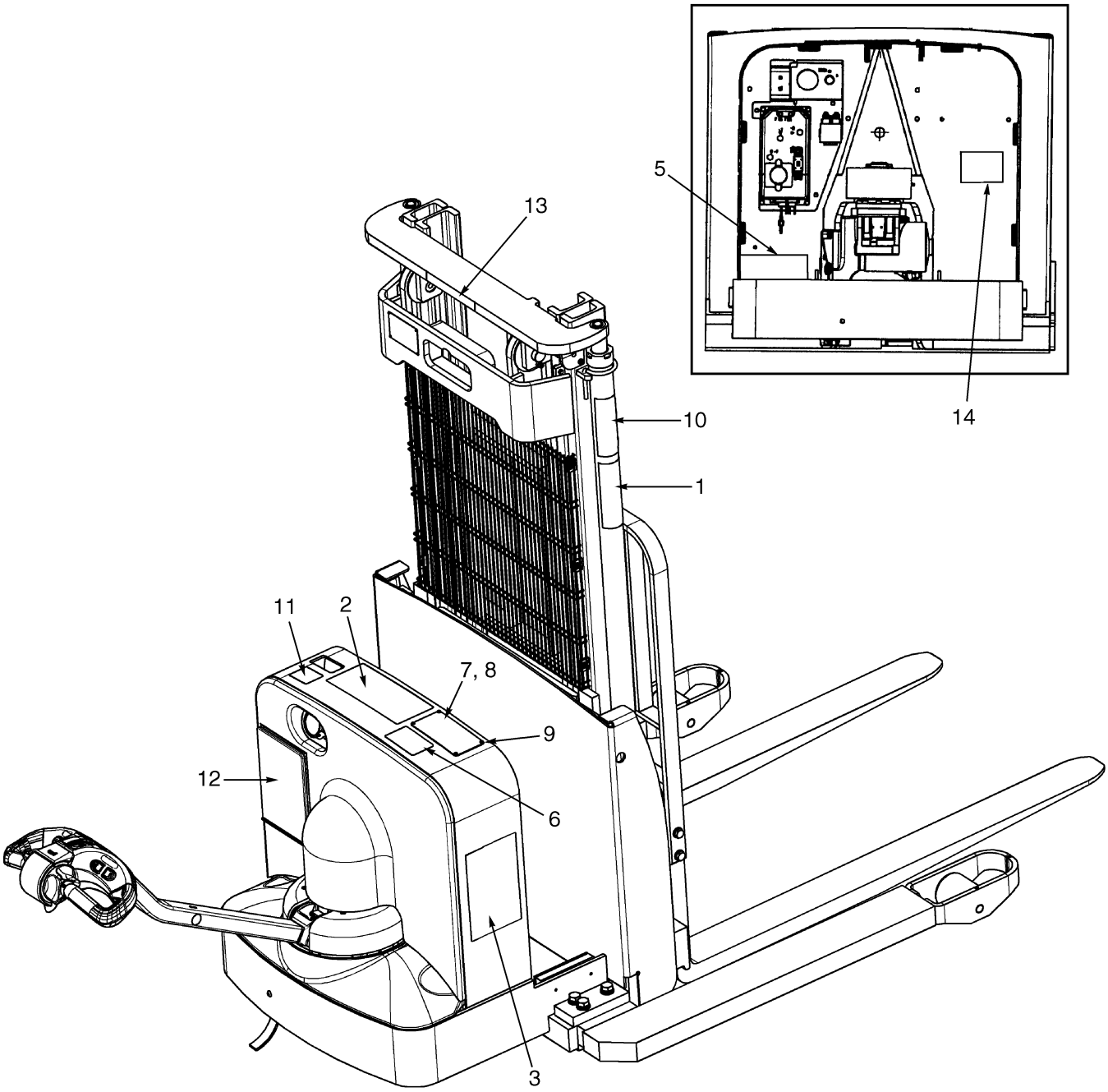

BP260018

©2015 HYSTER COMPANY

LABELS AND MANUAL

ITEM	PART NO.	DESCRIPTION	QTY
1	2308468	Label (Fork Warning)	2
2	2053653	Label (Warning and Instruction)	1
3	1529045	Label (Hyster)	2
4	1498313	Label (Dash)	1
5	1534660	Label (Patents and Trademarks)	1
6	1494689	Plate (UL Type E)	1
7	. . . . .	Nameplate (Contact your dealer.)	1
8	389688	Nameplate Cover	1
9	2307400	Rivet	4
10	1529043	Label (Hyster)	2
11	2044484	Label (Battery Discharge Notice - Flooded Battery)	1
11	2050774	Label (Battery Discharge Notice - AGM Battery) (PalletPro)	1
12	1506716	Operator Manual	1
13	2034124	Label (Mast Warning)	1
14	2055918	Label (Manual Lowering)	1

©2015 HYSTER COMPANY